Legend

Description	Quantity	Unit
Bathroom Tile	74.03	sf
Grab Bar	1	Count
Kitchen Tile	10.62	sf

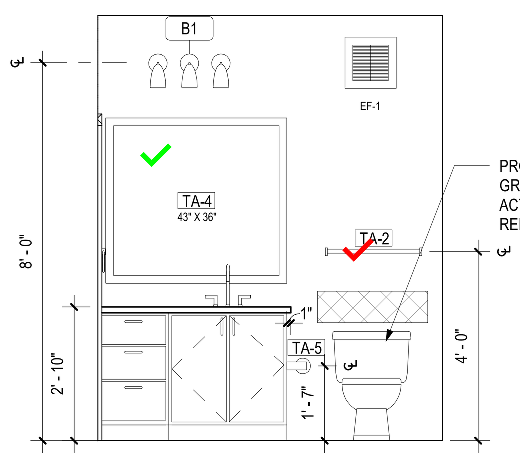

9 Unit S1 Bathroom Elevation 4
Scale: 3/8" = 1'-0"

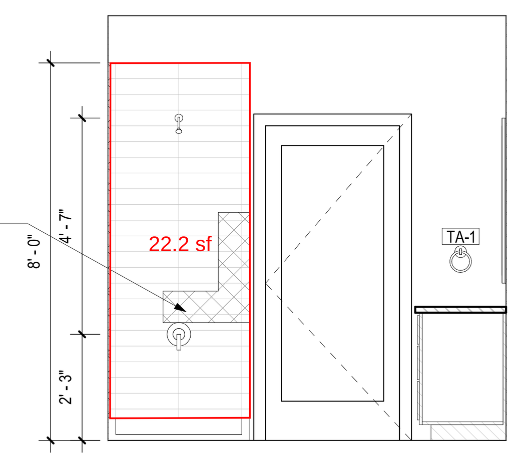

8 Unit S1 Bathroom Elevation 3
Scale: 3/8" = 1'-0"

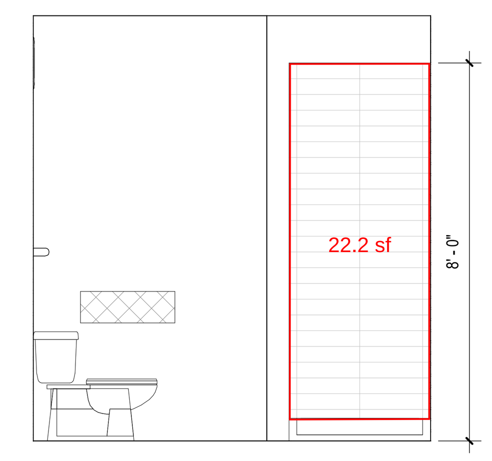

7 Unit S1 Bathroom Elevation 2
Scale: 3/8" = 1'-0"

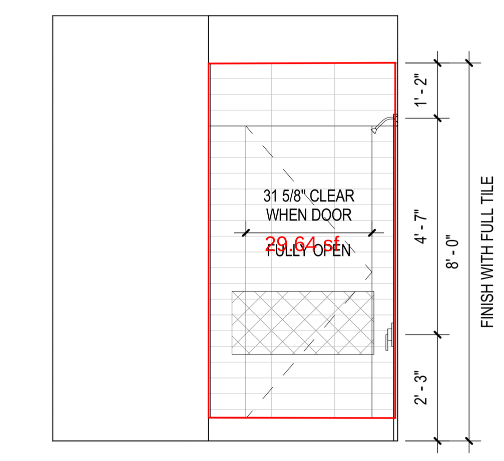

6 Unit S1 Bathroom Elevation 1
Scale: 3/8" = 1'-0"

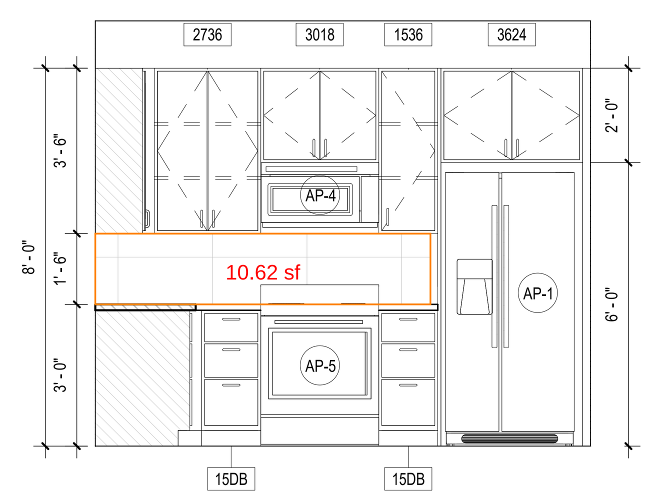

5 Unit S1 Kitchen Elevation 2
Scale: 3/8" = 1'-0"

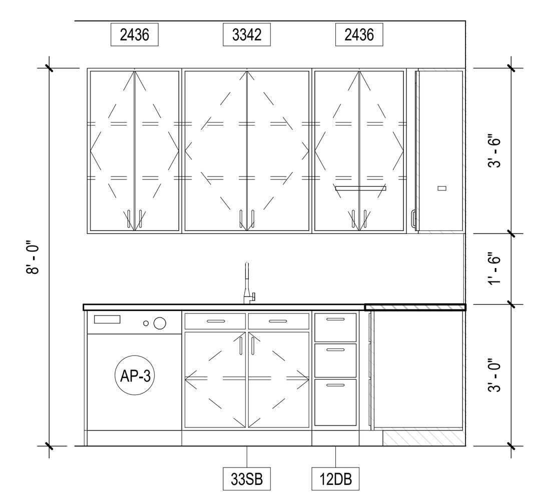

4 Unit S1 Kitchen Elevation 1
Scale: 3/8" = 1'-0"

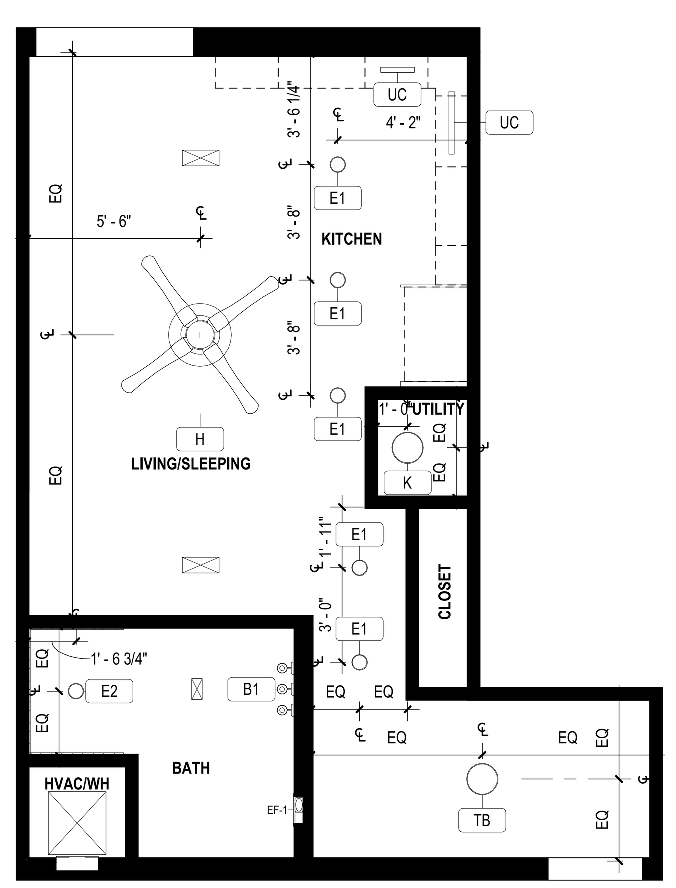

3 Unit S1 RCP
Scale: 1/4" = 1'-0"

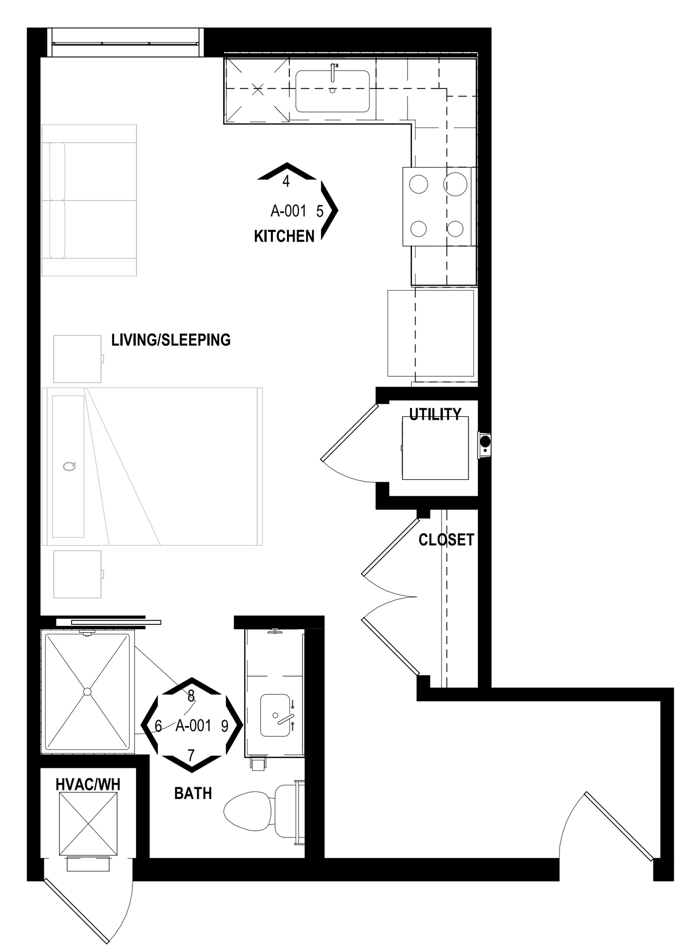

2 Unit S1 Finish Plan
Scale: 1/4" = 1'-0"

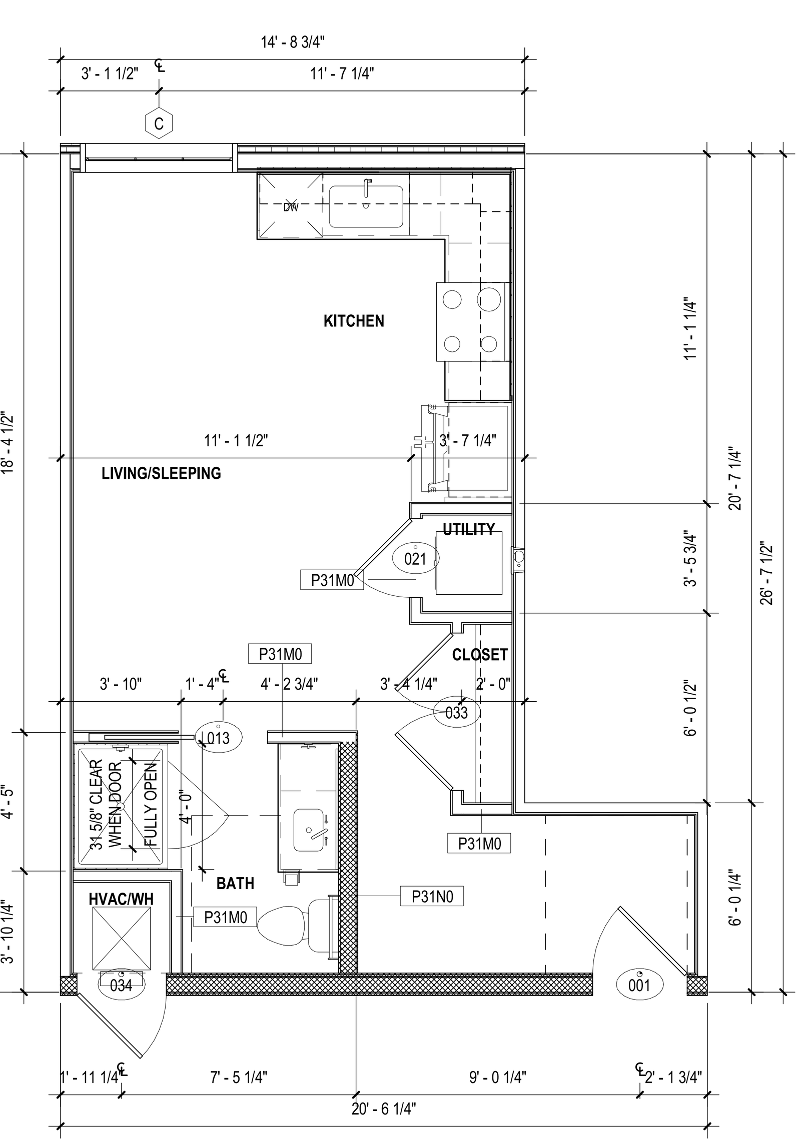

1 Unit S1 Plan
Scale: 1/4" = 1'-0"

UNIT PLAN GENERAL NOTES

1. ALL DIMENSIONS ARE TO FACE OF STUD UNLESS OTHERWISE NOTED, (U.O.N.)
2. PROVIDE BLOCKING FOR ALL WALL-MOUNTED ACCESSORIES AS REQUIRED.
3. ALL ANGLES ARE 45 DEGREES TO THE HORIZONTAL AND VERTICAL U.O.N., TYPICAL ALL UNITS.
4. INSULATION OCCURS IN ALL UNIT FLOOR/CEILING ASSEMBLIES. REFERENCE DETAILS FL01-FL02/A-740
5. REFER TO SHEETS G-201-G-203 FOR ACCESSIBILITY DESIGN STANDARDS.
6. PROVIDE WATER LINE WITH SHUT OFF VALVE AT ALL REFRIGERATOR LOCATIONS FOR ICE MAKER.
7. THRESHOLD AT DOORWAYS SHALL NOT EXCEED 1/2 INCH (13MM), INCLUDING BUT NOT LIMITED TO: ACCESSIBLE BUILDING ENTRIES, UNIT ENTRIES, AND ACCESSIBLE UNIT DOORS.
8. UNIT EXTERIORS VARY. COORDINATE WITH BUILDING ELEVATIONS FOR SIZE AND LOCATION OF FENESTRATION AS WELL AS EXTERIOR CLADDING MATERIALS.
9. SEE BUILDING PLANS FOR CORRIDOR AND DEMISING WALL TYPES
10. REFERENCE SHEET A-730 FOR WALL ASSEMBLIES. LEGEND PROVIDED BELOW FOR QUICK REFERENCE FOR STUD SIZE AND RATING.
11. REFERENCE SHEET A-700 FOR DOOR SCHEDULE. UNIT DOORS ARE SCHEDULED BY TYPE (000 SERIES) AND BUILDING/ANCILLARY DOORS ARE SCHEDULED BY INSTANCE. ARCHITECTURAL DOOR SCHEDULE INDICATES STYLE, DIMENSIONS, RATING, AND HARDWARE TYPES. REFERENCE ID FOR ALL SPECIFICATIONS AND FINISHES AS WELL AS ANY SPECIALTY DOORS.
12. INSTALL BLOCKING FOR FUTURE GRAB BAR MOUNTING IN ALL UNIT BATHROOMS IN ACCORDANCE WITH ANSI 2017 AND FAIR HOUSING ACCESSIBILITY DESIGN STANDARDS. REFERENCE G-201 FOR REQUIREMENTS
13. INTERIOR DOORS SHOWN IN THE CORNER OF A SPACE ARE ASSUMED TO BE 4 INCHES FROM THE CORNER WALL STUD AND NEED NOT BE DIMENSIONED U.O.N.
14. FURR-DOWNS MAY BE CONSTRUCTED USING ANY MATERIALS PERMITTED BY THE CONSTRUCTION TYPE AS DEFINED BY IBC, HOWEVER MATERIALS EXPOSED TO AIR FLOW (EXAMPLE: RETURN AIR PLENUM) MUST BE NON-COMBUSTIBLE OR MEET THE 25/50 FLAME SPREAD/SMOKE-DEVELOPED INDICES AS PER IMC 2015 SECTION 602.2.
15. KITCHEN BASE CABINETS ARE 24" DEEP, AND BATHROOM BASE CABINETS ARE 21" DEEP U.O.N.
16. INSULATE WALLS AT ALL PLUMBING RISERS
17. COORDINATE ALL FRAMING DIMENSIONS WITH THE FINAL FIXTURES SUPPLIED.
18. FIBERGLASS REINFORCED TILE BACKER BOARD TO BE INSTALLED IN ALL TUB/SHOWER AREAS.
19. WASHER AND DRYER CONNECTIONS TO BE ORIENTED CONSISTENTLY. WASHERS ON LEFT HAND SIDE, DRYERS ON RIGHT HAND SIDE. GC TO VERIFY AND COORDINATE THIS ON MIRRORED UNITS.
20. MINIMUM DIMENSIONS BETWEEN ALL OPPOSING BASE CABINETS, COUNTERTOPS, APPLIANCES, OR WALLS WITHIN THE KITCHEN SHALL BE 40" MINIMUM CLEAR.
21. INSTALL FLOORING UNDERLAYMENT UNDER ALL HARD SURFACE FLOORING.
22. ALL REACH-IN CLOSETS TO BE 1'-11" INSIDE CLEAR DEPTH MAX.
23. FURNITURE SHOWN FOR DESIGN INTENT ONLY

CASEWORK NOTATION LEGEND

UPPER CABINET:
WIDTH (IN)
HEIGHT (IN)
XXXX

BASE CABINET NOTATION:
WIDTH (IN)

XXBC*	BASE CABINET
XXDB*	DRAWER BASE
XXSB*	SINK BASE
XXVB*	VANITY BASE
XXVDB*	VANITY DRAWER BASE
XXVSB*	VANITY SINK BASE
FEP	FINISHED END PANEL
FP	FILLER PANEL

* [ ] STANDARD: 3'-0" MAX AFF TO TOP OF COUNTER/SINK
* [A] ACCESSIBLE - TYPE A: 2'-10" TO TOP OF COUNTER/SINK

DESIGN STANDARDS LEGEND

- FAIR HOUSING ACT GUIDELINES APPLY TO TYPE 'B' FHA DWELLING UNITS
- INDICATES GUIDELINES FOR SPECIFICATION 'A' BATHROOMS IN THE FAIR HOUSING ACT GUIDELINES
- INDICATES GUIDELINES FOR SPECIFICATION 'B' BATHROOMS IN THE FAIR HOUSING ACT GUIDELINES

WALL NOTATION LEGEND

P01A1
WALL GROUP (SEE BELOW)
FRAMING/MASONRY SIZE (SEE BELOW)
FIRE RATING (SEE SCHEDULE)
PARTITION NUMBER (REFER TO DETAILS)

WALL GROUP
E - EXTERIOR WALL
P - PARTITION
F - FURRING
S - SHAFTWALL/ASW

FRAMING/MASONRY SIZE
M - 2x4 NOMINAL METAL STUD
N - 2x6 NOMINAL METAL STUD
O - 2-1/2" C-H STUD
P - 2x4/2x4 NOMINAL METAL STUD
Q - 2x4/2x6 NOMINAL METAL STUD
R - 2x6/2x6 NOMINAL METAL STUD
S - 7/8" HAT CHANNELS
U -8" NOMINAL CONCRETE MASONRY UNIT
Z - CONCRETE (REF. STRUCTURAL)

UNIT KEY PLAN

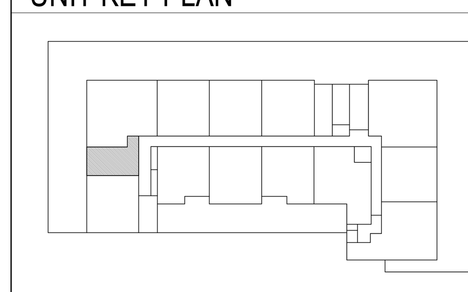

ARCHITECTURE **DEMAREST**
2320 Valdina Street, Studio B
Dallas, TX 75207
Tel: 214.748.6655
www.architecturedemarest.com

Copyright Reserved

Consultants

Client/Project
PROJECT NUMBER: 20.048
ART HOUSE
GSS, LLC
313 NORTH BECKLEY AVE
Q TEAM RESPONSE - [2024.05.03]

B	Q TEAM RESPONSE	2024.05.03

Revision (YYYY.MM.DD)

Q TEAM RESPONSE	2024.05.03

Issued (YYYY.MM.DD)

Drawn By: IB
Reviewed By: ED

Permit-Seal

PRELIMINARY
NOT FOR CONSTRUCTION
Not for permits, pricing or other official purposes.
This document has not been completed or checked and is for general information or comment only.
2024.05.03

Title
UNIT S1 - PLANS AND ELEVATIONS

Scale: As indicated
Revision: B

Drawing No.
A-001

12/2/2024 4:41:37 PM
ORIGINAL SHEET - (30"x42")